SPACECOM

JZ95152RAI

[SPECIFICATIONS]

Image Size: 2/3 1/2 1/3 1/4

Focal Length :	9.5 - 152mm
Maximum Relative Aperture :	1:1.8 at 9.5 - 110mm 1:2.3 at 152mm
Iris :	F1.8 - Approx. 360 (With ND Spot Filter)
Zoom Ratio :	16X
Sensitivity Adjustment :	0.5 - 1.0Vp-p(Image Signal)
Angular Field of View :	49.7 X38.3 deg. at 9.5mm 3.3 X 2.5 deg. at 152mm
Image Format :	8.8X6.6mm(D11mm)
Minimum Object Distance :	1.0m(From Front Vertex) 22mm at Macro
Object Dimensions at M.O.D. :	84.3X63.4cm at 9.5mm 6.3X 4.7cm at 152mm 8.1X 5.9cm at Macro
Optical Back Focal Distance :	20.15mm(In Air)
Flange Back :	17.526mm

Input Signal :	Composite Video Signal or Video Signal
Photometry Range :	Approx. 40% - 70% Variable to Vp-p
Input Impedance :	High Impedance
Operation : Zoom :	Motorized(DC+/-6.4V, Max80mA) Speed Approx. 6sec.
Focus :	Motorized(DC+/-6.4V, Max80mA) Speed Approx. 10sec.
Iris :	EE(DC+8.5 to 16V : Fixed Voltage, Max60mA) Speed Within 3sec.
EE Mechanism :	The built-in EE Amp amplifies the difference between the video signal from the camera and the preset Iris signal level. It causes the Iris to change size.
EE Accuracy :	With Input Video Signal 0.7Vp-p within+/-15% of Mean Value
Operation Temperature :	-10 to +50
Mount :	C-Mount(Adjustable Lens Position)
Front Thread :	86mm P1
Size, Weight :	120.5X100X171.6mm, Approx. 1.5kg

[COMPOSITION]

Lens 1
Lens Cap 1
Dust Cap 1

4-Conductor Connector (Female) 1
(Any 4-conductor cable of external dia 6mm to be prepared separately.)

[DIMENSIONS]

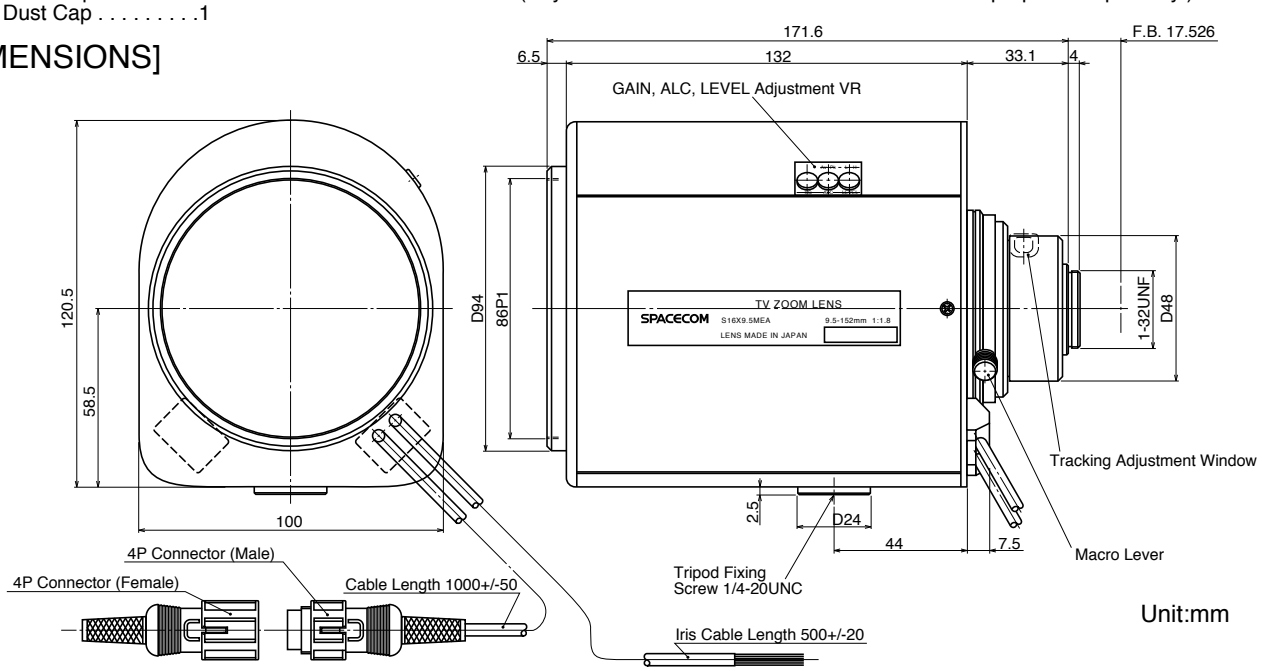

[CIRCUIT DIAGRAM]

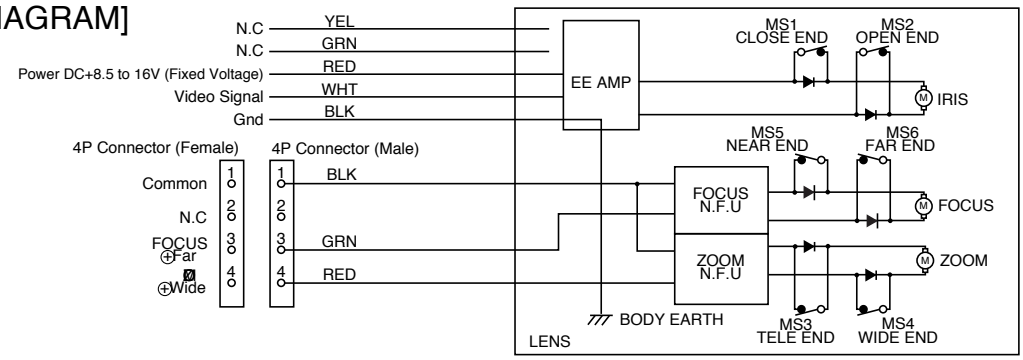

SUBJECT TO CHANGE WITHOUT NOTICE.